OD9225 IP69K Series

DC Fans - 12, 24, 48V
92mm x 25mm (3.6” x 1.0”)

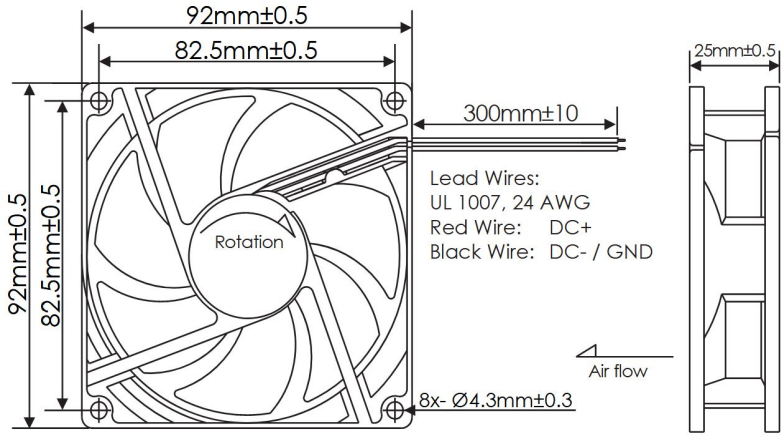

Frame	PBT, UL94 V-0 Plastic
Impeller	PBT, UL94 V-0 Plastic
Connection	2x Lead Wires, 24 AWG
Motor	Brushless DC, Auto Cutoff, Auto Restart, Polarity Protected, Electronically Protected, IP69K
Bearing System	Ball Bearings
Dielectric Strength	500VDC/min, <1mA
Insulation Resistance	≥10M Ohm @ 500 VDC

Operating Temperature
-20°C ~ +65°C

Storage Temperature
-20°C ~ +75°C

Life Expectancy
70,000 Hours (L10 at 40°C)

Available Options
Tachometer Output
Alarm Output
PWM Speed Control Input
Other IP Ratings

Weight: 0.21 lbs.

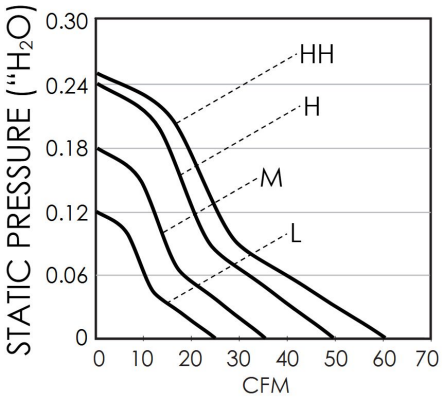

Part Number	Rated Voltage (Volts DC)	Voltage Range (Volts DC)	Input Power (Watts)	Rated Current (Amps)	Rated Speed (RPM)	Max Airflow (CFM)	Noise Level (dBA)	Max Static Pressure (“H_2O)
OD9225-12HBIP69K	12	8 ~ 13.8	3.0	0.29	2900	49.8	35	0.24”
OD9225-24HBIP69K	24	15 ~ 26.4	3.5	0.18	2900	49.8	35	0.24”
OD9225-48HBIP69K	48	28 ~ 52.8	4.3	0.09	2900	49.8	35	0.24”

Knight Electronics, Inc.
10557 Metric Drive
Dallas, TX 75243
214-340-0265

Revised 10/20/2023
m0

OD9225 IP69K Series with PWM

DC Fans - 12, 24, 48V
92mm x 25mm (3.6" x 1.0")

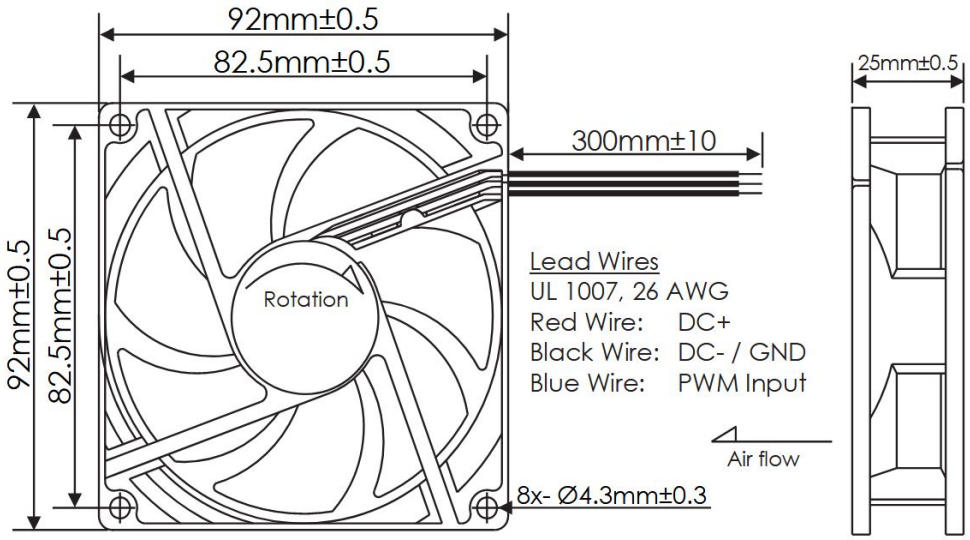

Frame	PBT, UL94 V-0 Plastic
Impeller	PBT, UL94 V-0 Plastic
Connection	3x Lead Wires, 26 AWG
Motor	Brushless DC, Auto Cutoff, Auto Restart, Polarity Protected, Electronically Protected, IP69K
Bearing System	Ball Bearings
Dielectric Strength	500VDC/min, <1mA
Insulation Resistance	≥10M Ohm @ 500 VDC

Operating Temperature
-20°C ~ +65°C

Storage Temperature
-20°C ~ +75°C

Life Expectancy
70,000 Hours (L10 at 40°C)

Installed Options
PWM Speed Control Input
IP69K Rated Motor

Weight: 0.18 lbs.

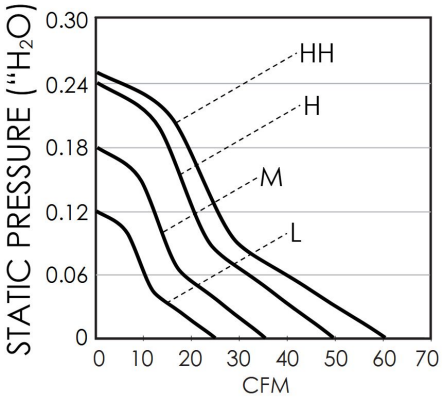

Part Number	Rated Voltage (Volts DC)	Voltage Range (Volts DC)	Input Power (Watts)	Rated Current (Amps)	Rated Speed (RPM)	Max Airflow (CFM)	Noise Level (dBA)	Max Static Pressure ("H_2O)
OD9225-12HB05IP69K	12	8 ~ 13.8	3.0	0.29	2900	49.8	35	0.24"
OD9225-24HB05IP69K	24	15 ~ 26.4	3.5	0.18	2900	49.8	35	0.24"
OD9225-48HB05IP69K	48	28 ~ 52.8	4.3	0.09	2900	49.8	35	0.24"

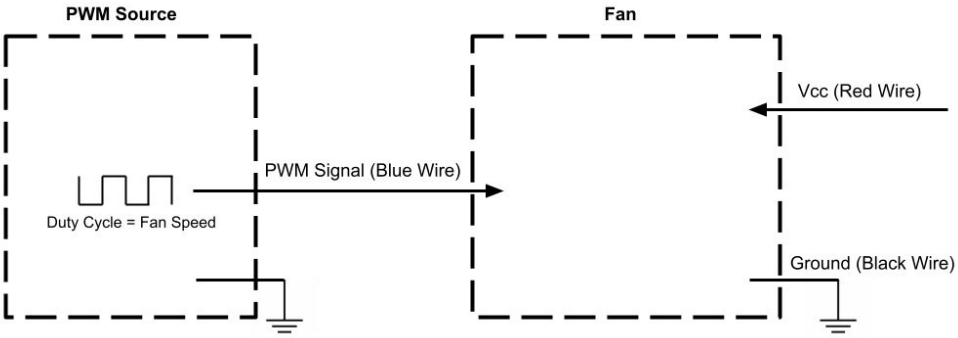

PWM Max High Voltage: 5V
PWM Max Sink Current: 5mA
PWM Frequency Range: 1KHz-100KHz
PWM Typical Frequency: 25KHz
RPM at 0% Duty Cycle: 0 RPM
RPM will be full speed if PWM input is disconnected.

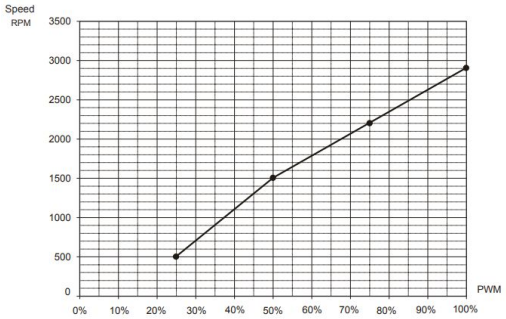

Knight Electronics, Inc.
10557 Metric Drive
Dallas, TX 75243
214-340-0265

Revised 10/20/2023
m0

Orion Fans
Information and data is subject to change without prior notification