MATERIAL NO.	ENGINEERING NO.	FINISHED LENGTH
1300240028	DN01A-M010	1 M (3 FT 3.37 IN)
1300240031	DN01A-M020	2 M (6 FT 6.74 IN)
1300240034	DN01A-M050	5 M (16 FT 4.85 IN)

C

CABLE LENGTH TOLERANCES
<.3M [1FT]: +19mm-0 [+.75in-0]
.3 - .9M [1 - 3FT]: +44.5mm-0 [+1.75in-0]
.9 - 1.8M [3 - 6FT]: +55.6mm-0 [+2.19in-0]
1.8 - 3.7M [6 - 12FT: +88.9mm-0 [+3.50in-0]
3.7 - 7.3M [12 - 24FT]: +165.1mm-0 [+6.50in-0]
7.3-14.6M [24 - 48FT]: +317.5mm-0 [+12.50in-0]
14.6 - 30.5M [48-100FT]: +622.3mm-0 [+24.50in-0]
OVER 30M [100FT] +2% OF FINISHED LENGTH

C

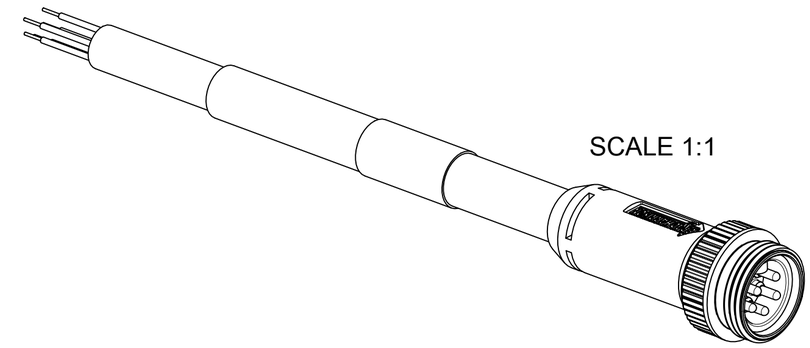

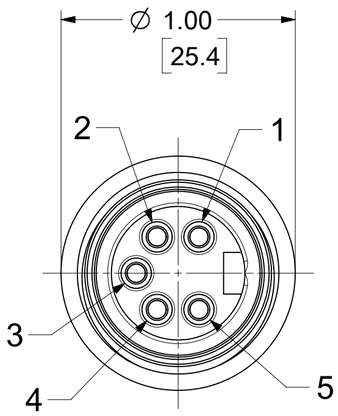

MALE FACE VIEW

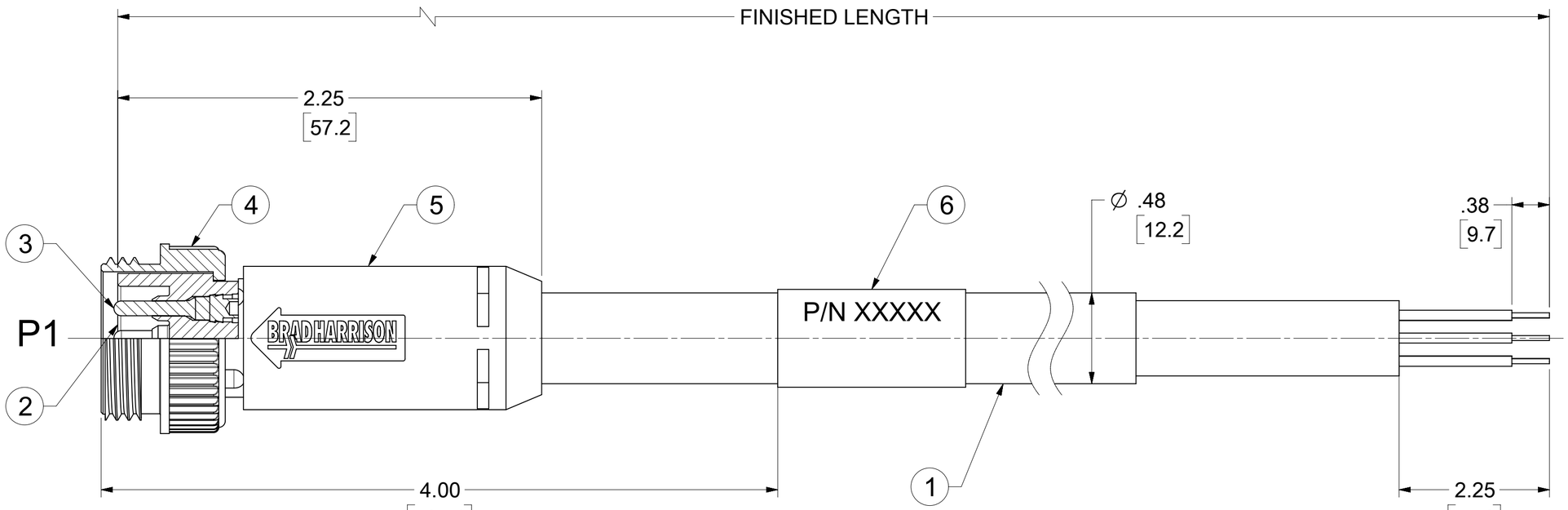

NOTES:
1. MATERIAL: AS NOTED
2. FINISH: AS NOTED
3. ELECTRICAL:
   VOLTAGE RATING: 300V
   CURRENT: 4A
4. TEMP RATING: -20°C TO +80°C C
5. PROTECTION: IP67 (WHEN MATED) C
6. CSA CERTIFIED FILE: LR6837 C
   UL RECOGNIZED FILE: E152210
7. COUPLING THREAD: 7/8"-16UN
8. MATES WITH: MINI-CHANGE, A-SIZE 5 POLE RECEPTACLE
9. ALL DIMS ARE FOR REFERENCE UNLESS TOLERANCED OR NOTED OTHERWISE

WIRING DIAGRAM

P1

1	DRAIN
2	RED +V
3	BLACK -V
4	WHITE CAN H
5	BLUE CAN L

PART NUMBER LEGEND C

DN01A-M010

FINISHED LENGTH
M005= 0.5 M
M010= 1 M
M100= 10M

ITEM	DESCRIPTION	MATERIAL	FINISH	
6	WRAP LABEL	VINYL	BLACK/YELLOW	
5	OVERMOLD	TPE	GRAY	C
4	COUPLING NUT	ZINC DIE CAST	BLACK E-COAT	
3	PIN CONTACT	Cu ALLOY	GOLD OVER NICKEL	
2	MALE INSERT	TPE	BLACK	C
1	CABLE, DEV-NET, TRUNK, #18-2, 15-2	PVC JACKET	GRAY	

DOCUMENT STATUS	P1	RELEASE DATE	2022/03/26	00:25:17

FUNCTIONAL SYMBOLS
FA = 0
FC = 0
FP = 0
DIVISIONAL SYMBOLS

THIS DRAWING CONTAINS INFORMATION THAT IS PROPRIETARY TO MOLEX ELECTRONIC TECHNOLOGIES, LLC AND SHOULD NOT BE USED WITHOUT WRITTEN PERMISSION

DIMENSION UNITS: INCH
SCALE: 2:1

GENERAL TOLERANCES (UNLESS SPECIFIED)

	MM	INCH
4 PLACES	±	±
3 PLACES	±	±
2 PLACES	±	±
1 PLACE	±	±
0 PLACES	±	±
ANGULAR TOL	± °	

DRAFT WHERE APPLICABLE MUST REMAIN WITHIN DIMENSIONS

CURRENT REV DESC: UPDATED ITEM #2,5 WERE PVC & MATERIAL P/N TABLE, REMOVED PIN CONTACT TO AVOID DUPLICATION, ADDED CSA, UL, TEMP RATING, IP RATING, TOL. CHART & PART NUMBER LEGEND

EC NO: 698297
DRWN: AKABADI 2021/10/08
CHK'D: RSTONE 2022/03/16
APPR: BWOODMAN 2022/03/26

INITIAL REVISION:
DRWN: RSTONE 2009/04/24
APPR: JFMURPHY 2009/04/29

THIRD ANGLE PROJECTION | DRAWING: C-SIZE | SERIES: 130024

molex

MINI-CHANGE DEVICENET, A SIZE
5 POLE, MALE, STRAIGHT, SINGLE KEY, 15/18AWG

PRODUCT CUSTOMER DRAWING

DOCUMENT NUMBER	DOC TYPE	DOC PART	REVISION
SD-130024-001	PSD	001	C

MATERIAL NUMBER	CUSTOMER	SHEET NUMBER
SEE TABLE	GENERAL MARKET	1 OF 1

FORMAT: Eng-legs-master-lb-prod-C
REVISION: E1
DATE: 2021/05/01