FOR-1754 Rev.1.1

未注公差/General tolerances(mm)

0~3	>3~6	>6~10	>10~18	>18~30	>30~50	>50~80	>80~120	>120~180	>180~250	>250~315	>315~400	>400~500	>500	0.1/10
±0.12	±0.18	±0.22	±0.26	±0.31	±0.37	±0.57	±0.80	±0.93	±1.05	±1.15	±1.60	±2.20	±2.50	±2°

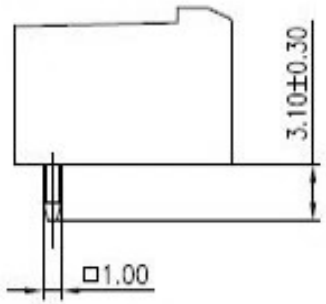

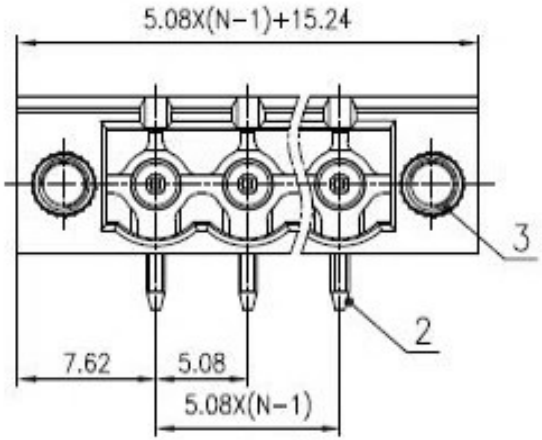

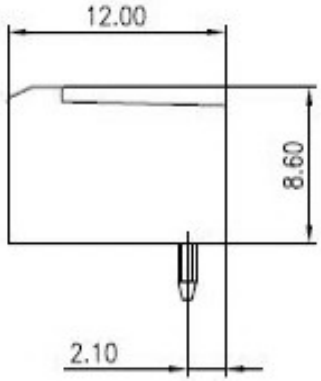

PCB LAYOUT

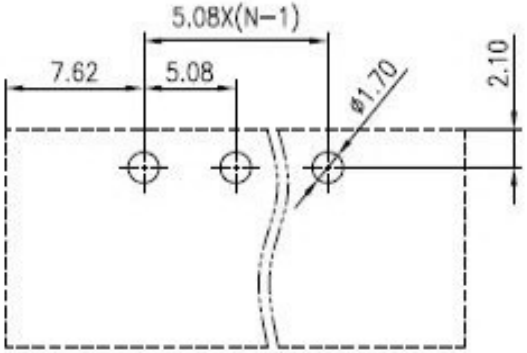

ITEM	NAME OF PART	MATERIAL	NOTES
3	Nut	Copper alloy	M2.5
2	Pin header	Copper	Sn Plated
1	Housing	PA66	UL94V-0

UL 标准/UL Standard:	B	C	D
额定电压/电流/Rated Voltage(V)/Current(A)	300/15	/	300/10
IEC 标准/IEC Standard:			
过压类别/Overvoltage Category/污染等级/Pollution Degree	III/3	III/2	II/2
额定电压/电流/Rated Voltage(V)/Current(A)	/	320/20	/
额定脉冲电压(KV)/Rate Impulse Voltage(KV)	/	4	/
间距/Pitch(mm)/线数范围/Poles	5.08/N=02~22P		
使用温度范围/Operating temperature(°C)	-40~+105		
符合RoHS环保要求/Conform to RoHS	Yes		

REV	ECN	DESCRIPTION	DRFT	DATE
T2		Change frame	CenSL	2020.05.16
T1		Size revision	LZH	2019.07.01

MATERIAL: /
SURFACE: /
MAT NO.: /
STATUS: /
APPD: LanChH 2020.05.16
CHKD: GongYZh 2020.05.16
DRFT: CenSL 2020.05.16
SIZE: A4
mm (inch)

宁波高松电子有限公司
NINGBO DEGSON ELECTRICAL CO., LTD

NAME: 2EDGRM-5.08-XXP-1Y-100A(H)

DRAWING NO.: 2EDGRM-5.08-C11 REV T2

TYPE: CUSTOMER DRAWING SCALE: 2.5:1 SHEET 1/1