RoHS 2.0

| REV. | ECN NO. | DESCRIPTION | DATE | DESIGN |
|---|---|---|---|---|
| A1. | /. | 新版发行 | 2022.12.02 | LZR |

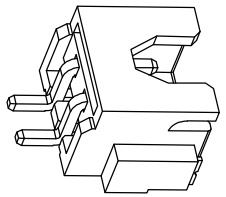

3D

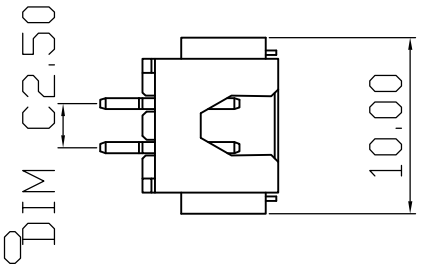


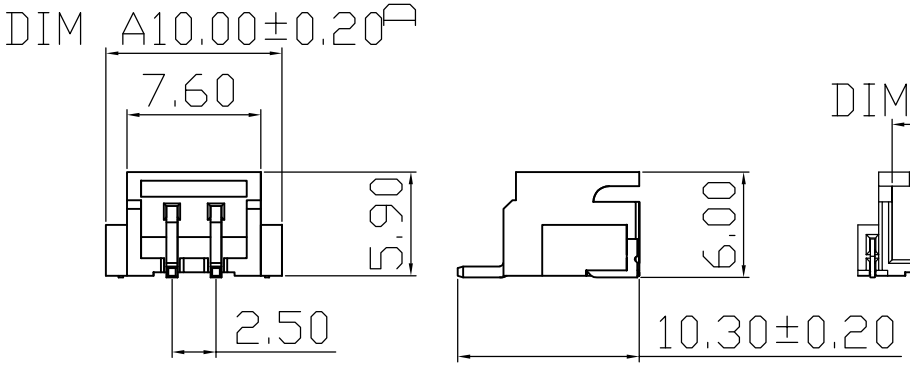


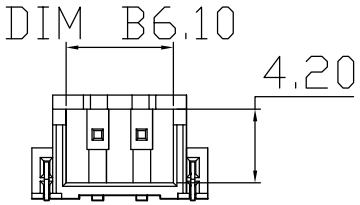


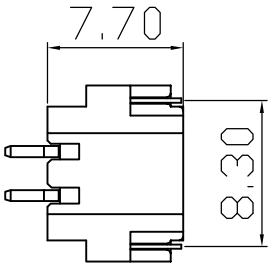


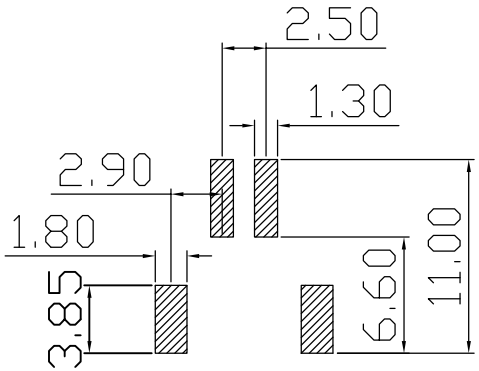


RECOMMENDER P.C.B.LAYOUT TOP VIEW
(COMPONENT SIDE TOLERANCE±0.1)

| PIN | DIM A | DIM B | DIM C |
|---|---|---|---|
| 2P | 10.00 | 6.10 | 2.50 |
| 3P | 12.50 | 8.60 | 5.00 |
| 4P | 15.00 | 11.10 | 7.50 |
| 5P | 17.50 | 13.60 | 10.00 |
| 6P | 20.00 | 16.10 | 12.50 |

SPECIFICATION

1.Contact resistance: ≤20Ω
2.Insulation resistance: ≥1000Ω
3.Rated voltage: 250 V AC DC
4.Rated current: 3.0 A AC DC
5.Withstand Voltage: 1000V AC/minute
6.Temperature Range : -25℃~+85℃

| 序号 | 品 名 | 材 质 | 电镀/颜色 | 备 注 |
|---|---|---|---|---|
| C | 插片 | 黄铜H65 | 镀镍锡 | |
| B | 插针 | 黄铜H65 | 镀镍锡 | |
| A | 基座 | LCP | 本色 | |

深圳市虹成电子有限公司

UNLESS OTHERWISE, GENERAL TOLERANCE:
X.xxx ±0.10
X.xx ±0.20
X.x ±0.30

ANGULAR:
X.xx° ±1°
X.x° ±3°
X.° ±5°

NAME: 2.5针座2PIN卧贴

P/N: HCZZ0021-2

DWG NO:

THIRD ANGLE PROJECTION

| UNIT: | SCALE | SIZE: | SHEET: | REV. |
|---|---|---|---|---|
| MM | 1:1 | A4 | 1/1 | A1 |

DRAWN: CHECKED: APPROVED: