NOTES:

1. MATERIALS AND FINISHES:
   BODY - BRASS, NICKEL PLATING
   CONTACT - BeCu, GOLD PLATING
   INSULATOR - PTFE, NATURAL
   CAP - PHOS. BRONZE, NICKEL PLATING

2. ELECTRICAL:
   A. IMPEDANCE: 50 OHM
   B. FREQUENCY RANGE: DC - 18 GHz
   C. VSWR(RETURN LOSS): 1.15 (-23 dB) MAX. DC-8 GHz
   1.20 (-20 dB) MAX. 8-18 GHz
   D. AVG. POWER: 2 WATTS (POWER DERATED LINEARLY FROM 20°C TO 1 WATT AT 125°C)
   E. PEAK POWER: 200 WATTS (PEAK POWER FOR 1% DUTY CYCLE OF 0.005 MAX. PULSE DURATION OF 5 MICROSECONDS)

3. MECHANICAL:
   A. DURABILITY: 500 CYCLES MIN.
   B. TEMPERATURE RANGE: -65° C TO 165° C

4. PACKAGING:
   A. QUANTITY: SINGLE PACK
   B. MARKING: PACKAGING TO BE MARKED "AMPHENOL RF, 82-6693 & DATE CODE"

THIRD ANGLE PROJ.

REVISIONS				
REV	DESCRIPTION	DATE	ECN	APPR
A	RELEASE TO MANUFACTURING	07-May-19	11422	CJV

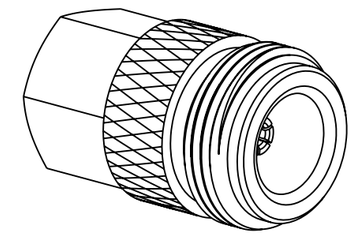

SCALE 2.000

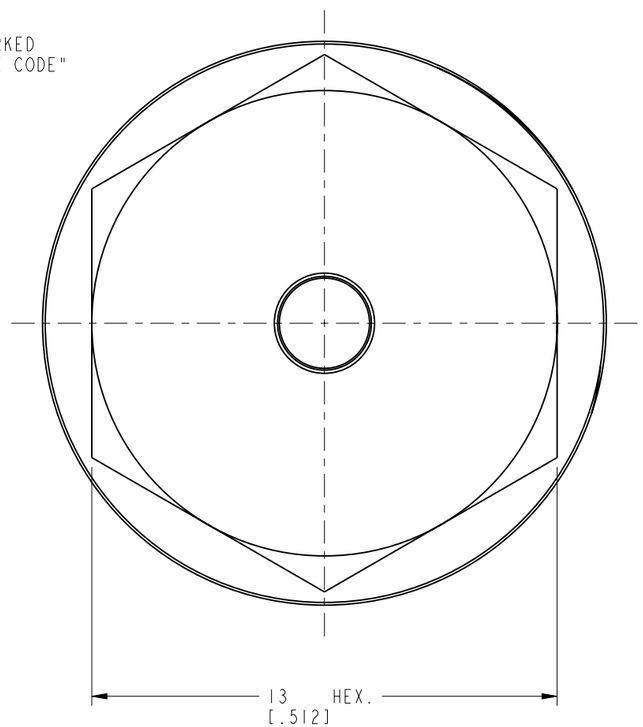

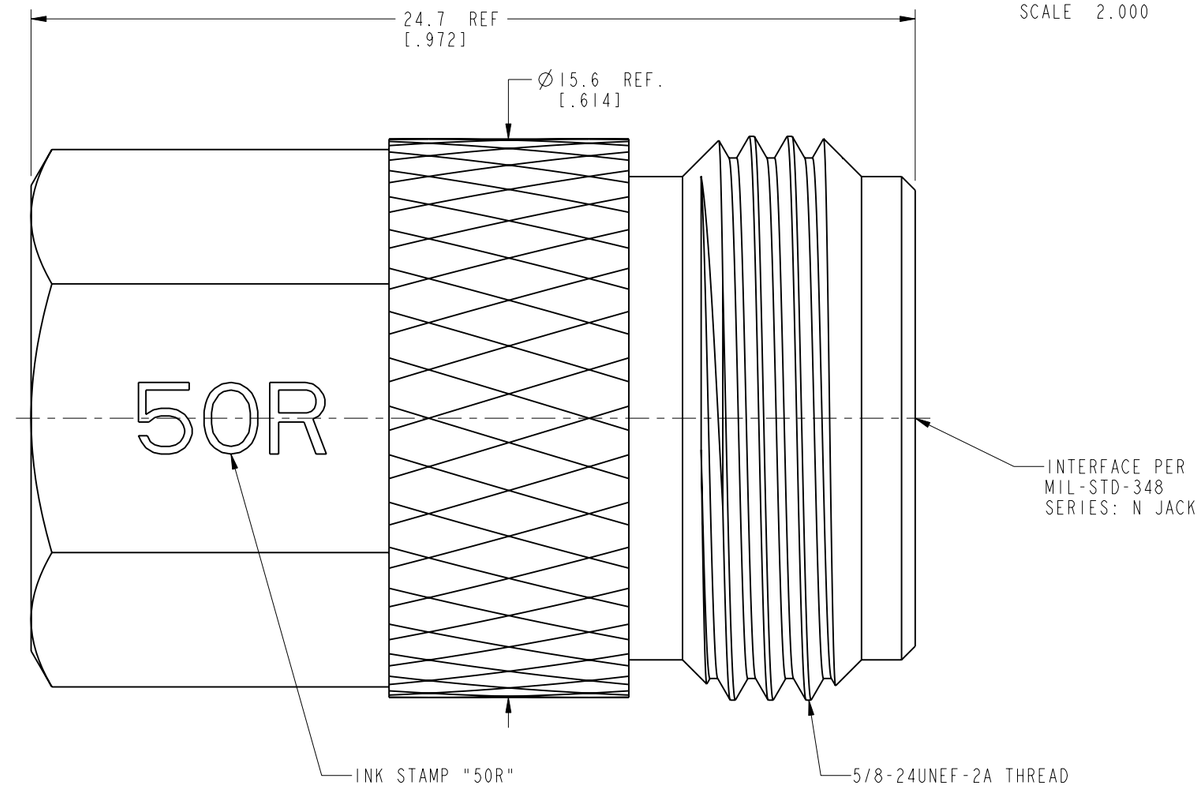

CUSTOMER OUTLINE DRAWING

ALL OTHER SHEETS ARE FOR INTERNAL USE ONLY

UNLESS OTHERWISE SPECIFIED, DIMENSIONS ARE IN METRIC AND TOLERANCES ARE:

<0.5mm	0.5 - 6mm	6 - 30mm	30 - 120mm	ANGLES
± 0.05mm	±0.1mm	±0.2mm	± 0.3mm	±1°

NOTICE - These drawings, specifications, or other data (1) are, and remain the property of Amphenol corp. (2) must be returned upon request; and (3) are confidential and not to be disclosed to any person other than those to whom they are given by Amphenol Corp. the furnishing of these drawings, specifications, or other data by Amphenol Corp., or to any other person to anyone for any purpose is not to be regarded by implication or otherwise in any manner licensing, granting rights to permitting such holder or any other person to manufacture, use or sell any product, process or design, patented or otherwise, that may in any way be related to or disclosed by said drawings, specifications, or other data.

MATERIAL
SEE NOTES

REFERENCE
EAR# 8746
REF: ---

CONFIGURATION LEVEL: In Work

FINISH

	DATE
DRAWN M.ZHANG	07-May-19
ENGINEER C. VIGORITO	25-Jan-19
APPROVED S.HSIEH	09-May-19
CAD FILE	

TITLE
TERMINATION JACK
18 GHz TYPE N
2 WATTS

SCALE: 6.0:1.0 | SHEET 2 OF 2

DWG SIZE B | REV A

Amphenol RF
www.amphenolrf.com

DRAWING NO. 82-6693
ITEM NO. 82-6693
PART NO. 82-6693