SIGN	DESCRIPTON	DATE	APPROVER

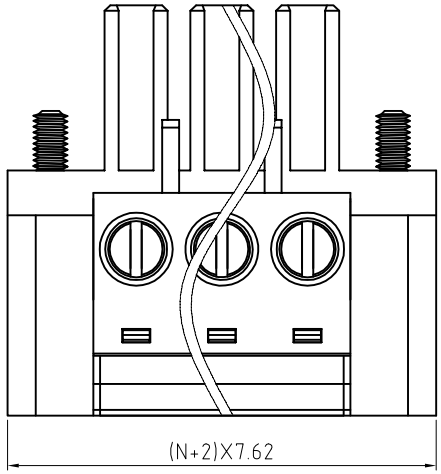

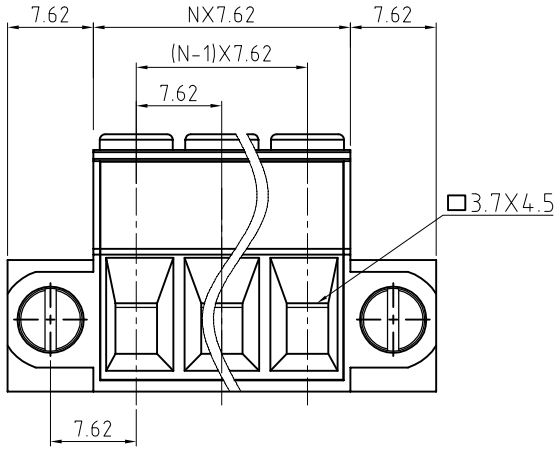

N=Number of contacts

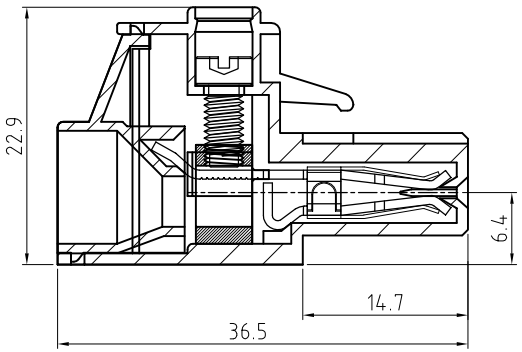

Technical Data:

Material:

- Contact(metal housing): Copper Alloy with Ni plated
- Terminal screw: Steel galvanized with Cr3+ plated
- Wire guard: Copper Alloy Tin plated
- Wire guard: Stainless steel

Insulator body(housing): Polyamide(UL94V-0)

Electrical

- Voltage rating: 300VAC
- Current rating: 42 Amps/way max
- Contact resistance: 20mΩ(max)
- Withstanding Voltage: 2500VAC(1min) Test time=60sec/1pcs
- Wire range: 8-24AWG

Mechanical:

- Torque: 8.0kgf.cm/M3.5
- Operating temperature: -40°C to +105°C
- Soldring reliability:
  - Test temperature= 250°C±10°C
  - 5 seconds max

Ordering Information:

F77-6-G XX-X 0 0X 0 0 0 0

- XX: 2 ~ 24, 02 ~ 24
- X: 1 "-" SCREW; 2 "-/+" SCREW
- 0X: 5 Green; 6 Blue; 8 Grey; A Black

WELINK 恒翊電子科技有限公司 Welink International Co.,LTD.

TOLERANCE X. ±0.50 X.X ±0.30 X.XX ±0.20 X° ±1°	APPROVED:		NAME: F77 - 6 - Pitch 7.62mm - Series
	CHECKED:		
	DRAWN: Yang Ming 2012,06,20		
	UNITS: mm	REV: A	PART NO: F776GXX100X0000
	SCALE: 2 / 1	PAGE: 1 / 1	DWG NO: 9F776G001A