REV	LOCATIONS	DESCRIPTION	DATE	REVISER	APPD
1	1	1: Size change 2: material changed to LCP	30/DEC/22	MATT	CHERRY

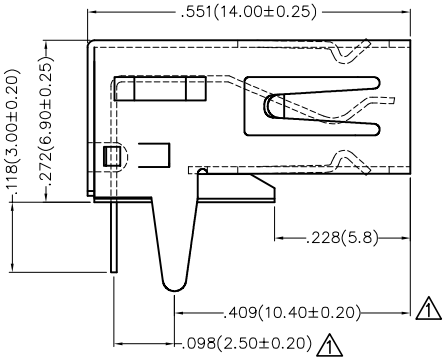

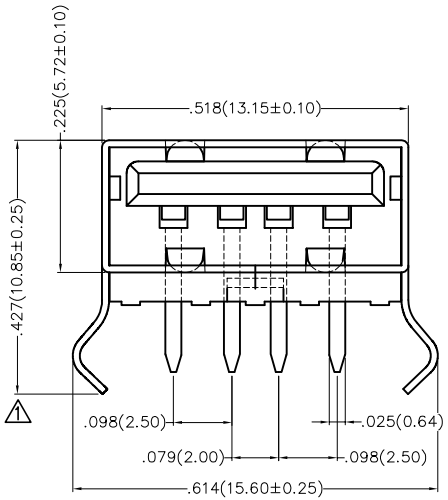

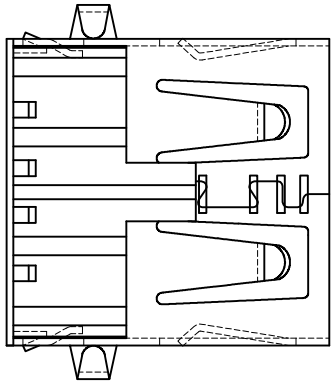

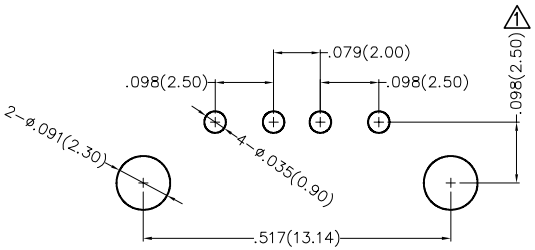

Recommended P.C.Board Layout

SPECIFICATIONS

Electrical
- Current Rating: 1.5A AC(rms)/DC
- Voltage Rating: 30V AC(rms)/DC
- Contact Resistance: 30 mΩ Max
- Withstanding Voltage: 500V AC r.m.s
- Insulation Resistance: 1000 MΩ Min
- Temperature Range-Operating: -25°C~+85°C

Mechanical
- Insertion Force: 3.75kgf Max
- Withdrawal Force: 1.02kgf Min
- Retention Force: 1.2kgf Min

Material And Plating
- Housing: LCP UL94V-0
- Contact: Brass/ Gold Plated On Mating Area, Tin Plated On Solder Tails
- Shell: Brass/ Nickel Plated

Ordering Informaion

FUS	2	50	—	F	D	B	XX	K
1	2	3		4	5	6	7	8

	1	2	3	4
	Category	Series Number	Distinction No.	Type
	FUS-USB	2-USB 2.0	50	F-Female

	5	6	7	8
	Assembly Layout	Entry Angle	Color-Resin	Packaging
	D-DIP	B-90° Angle	K6-Black W1-Nature 1	K-Tray

THIRD ANGLE PROJECTION	GENERAL TOLERANCES (UNLESS SPECIFIED)		APPROVE BY FRANK	DATE 09/MAY/13	PART NO. FUS250-FDBXXK / ITEM NO. FUS250
DESIGN UNITS Inch (metric)	X.±.012(0.30)	X.°±5°	CHECKED BY CHERRY	DATE 09/MAY/13	TITLE USB A-type 4Circuits 90°Angle Female
	X.X±.008(0.20)	.X°±2°			
SCALE 5:1 / SIZE A4	X.XX±.006(0.15)	.XX°±1°	DRAWN BY KATE	DATE 09/MAY/13	REV 1 / SHEET NO. 1/1
	X.XXX±.004(0.10)	.XXX°±0.5°			

TXGA Leader Of Industry

THIS DRAWING CONTAINS INFORMATION THAT IS PROPRIETARY TO TXGA INDUSTRIAL ELECTRONICS(S.Z)CO.,LTD AND SHOULD NOT BE USED WITHOUT WRITTEN PERMISSION