これは原本のコピーです。This document is a copy of the original

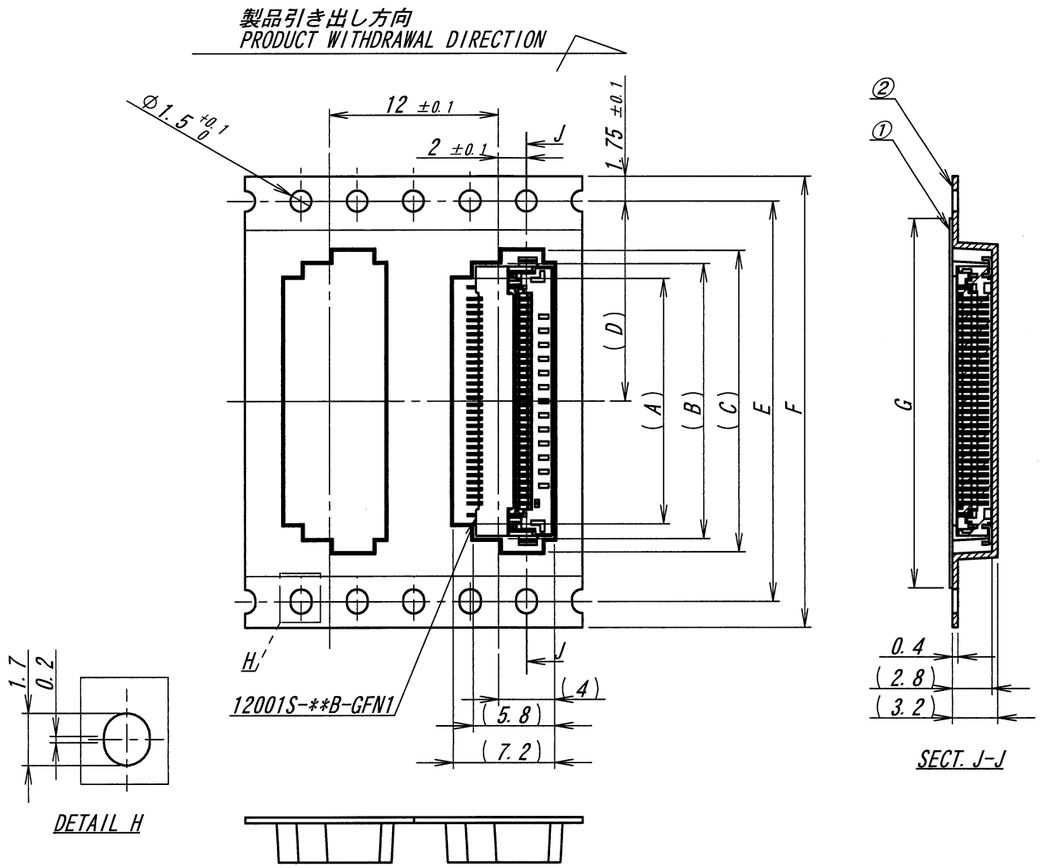

NOTE

1. 梱包数量/UNIT QUANTITY:2000
2. ﾘｰﾄﾞﾃｰﾌﾟ長さ/LEAD TAPE LENGTH

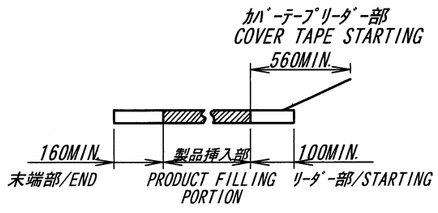

3. 24mm幅はシングルキャリア
F=24mm IS SINGLE CARRIER

4. ｶﾊﾞｰﾃｰﾌﾟの剥離強度/COVER TAPE PEELING FORCE
: 0.1N～1.3N

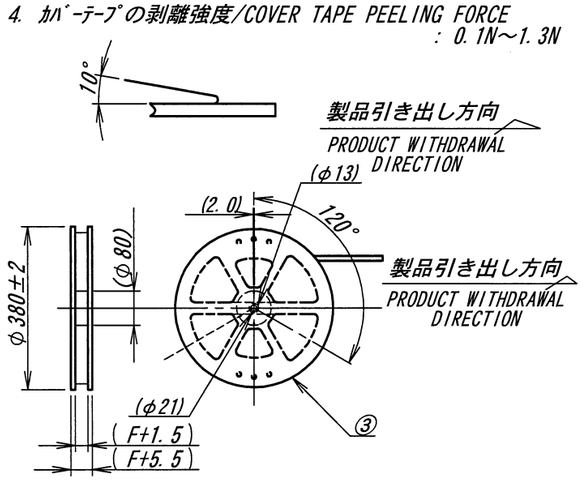

極数 CKT	部品番号 PARTS No.	A	B	C	D	E	F	G
6	12001S-06Y903	5.4	7.5	9.4	11.5	14.2	24.0	21.5
~~7~~	12001S-07Y903	5.9	8.0	9.9				
8	12001S-08Y903	6.4	8.5	10.4				
~~9~~	12001S-09Y903	6.9	9.0	10.9				
10	12001S-10Y903	7.4	9.5	11.4				
~~11~~	12001S-11Y903	7.9	10.0	11.9				
12	12001S-12Y903	8.4	10.5	12.4				
~~13~~	12001S-13Y903	8.9	11.0	12.9				
14	12001S-14Y903	9.4	11.5	13.4				
15	12001S-15Y903	9.9	12.0	13.9				
16	12001S-16Y903	10.4	12.5	14.4				
~~17~~	12001S-17Y903	10.9	13.0	14.9				
~~18~~	12001S-18Y903	11.4	13.5	15.4				
~~19~~	12001S-19Y903	11.9	14.0	15.9				
20	12001S-20Y903	12.4	14.5	16.4	14.2	28.4	32.0	26.0
~~21~~	12001S-21Y903	12.9	15.0	16.9				
22	12001S-22Y903	13.4	15.5	17.4				
~~23~~	12001S-23Y903	13.9	16.0	17.9				
24	12001S-24Y903	14.4	16.5	18.4				
~~25~~	12001S-25Y903	14.9	17.0	18.9				
26	12001S-26Y903	15.4	17.5	19.4				
~~27~~	12001S-27Y903	15.9	18.0	19.9				
28	12001S-28Y903	16.4	18.5	20.4				
~~29~~	12001S-29Y903	16.9	19.0	20.9				
30	12001S-30Y903	17.4	19.5	21.4	20.2	40.4	44.0	37.0
~~31~~	12001S-31Y903	17.9	20.0	21.9				
32	12001S-32Y903	18.4	20.5	22.4				
~~33~~	12001S-33Y903	18.9	21.0	22.9				
~~34~~	12001S-34Y903	19.4	21.5	23.4				
35	12001S-35Y903	19.9	22.0	23.9				
~~36~~	12001S-36Y903	20.4	22.5	24.4				
~~37~~	12001S-37Y903	20.9	23.0	24.9				
~~38~~	12001S-38Y903	21.4	23.5	25.4				
~~39~~	12001S-39Y903	21.9	24.0	25.9				
40	12001S-40Y903	22.4	24.5	26.4				
~~41~~	12001S-41Y903	22.9	25.0	26.9				
42	12001S-42Y903	23.4	25.5	27.4				
~~43~~	12001S-43Y903	23.9	26.0	27.9				
~~44~~	12001S-44Y903	24.4	26.5	28.4				
~~45~~	12001S-45Y903	24.9	27.0	28.9				
~~46~~	12001S-46Y903	25.4	27.5	29.4				
~~47~~	12001S-47Y903	25.9	28.0	29.9				
48	12001S-48Y903	26.4	28.5	30.4				
~~49~~	12001S-49Y903	26.9	29.0	30.9				
50	12001S-50Y903	27.4	29.5	31.4	26.2	52.4	56.0	49.0
~~51~~	12001S-51Y903	27.9	30.0	31.9				
~~52~~	12001S-52Y903	28.4	30.5	32.4				
~~53~~	12001S-53Y903	28.9	31.0	32.9				
~~54~~	12001S-54Y903	29.4	31.5	33.4				
55	12001S-55Y903	29.9	32.0	33.9				
~~56~~	12001S-56Y903	30.4	32.5	34.4				
~~57~~	12001S-57Y903	30.9	33.0	34.9				
~~58~~	12001S-58Y903	31.4	33.5	35.4				
~~59~~	12001S-59Y903	31.9	34.0	35.9				
60	12001S-60Y903	32.4	34.5	36.4				
64	12001S-64Y903	34.4	36.5	38.4				
68	12001S-68Y903	36.4	38.5	40.4				
70	12001S-70Y903	37.4	39.5	41.4				

LTR 記号	ECN No	REVISION RECORD 記事	DR	CHK	DATE 年月日
1	19008	NOTE REV	Y.H	A.M	'19-2-21
0	50981	RELEASED	J.O	T.T	'15-12-10

MATERIAL 材質
①ｶﾊﾞｰﾃｰﾌﾟ/COVER TAPE : PET TYPE
②ｷｬﾘｱﾃｰﾌﾟ/CARRIER TAPE : PS
③ﾘｰﾙ/REEL : PS 黒色/BLACK

FINISH 仕上げ

GENERAL TOLERANCES 一般公差
DIM 寸法 ± 0.3
ANGLE 角度 ±

3RD. ANG. PROJ. 三角法

SCALE 尺度 /
UNIT 単位 mm
DR '19-2-21 Y.Hamada
DSN '15-12-10 J.Oguro
CHK '19-2-21 A.Miura
APP '19-2-22 T.Takano

IRISO ELECTRONICS CO., LTD
イリソ電子工業株式会社

TITLE 名称
12001シリーズ FFC/FPC ソケット エンボス梱包品
SERIES 12001 FFC/FPC SOCKET EMBOSS PRODUCT

EDP No

PARTS No 部番
IMSA-12001S-**Y903

DWG No 図番
120-412001-001

REV. 1

DO NOT SCALE DRAWING.
THIS DRAWING CONTAINS INFORMATION THAT IS PROPRIETARY TO IRISO AND SHOULD NOT BE USED WITHOUT WRITTEN PERMISSION. 本図面は、イリソ電子工業（株）の所有する情報を含むもので当社の許可なく複製を禁止する。