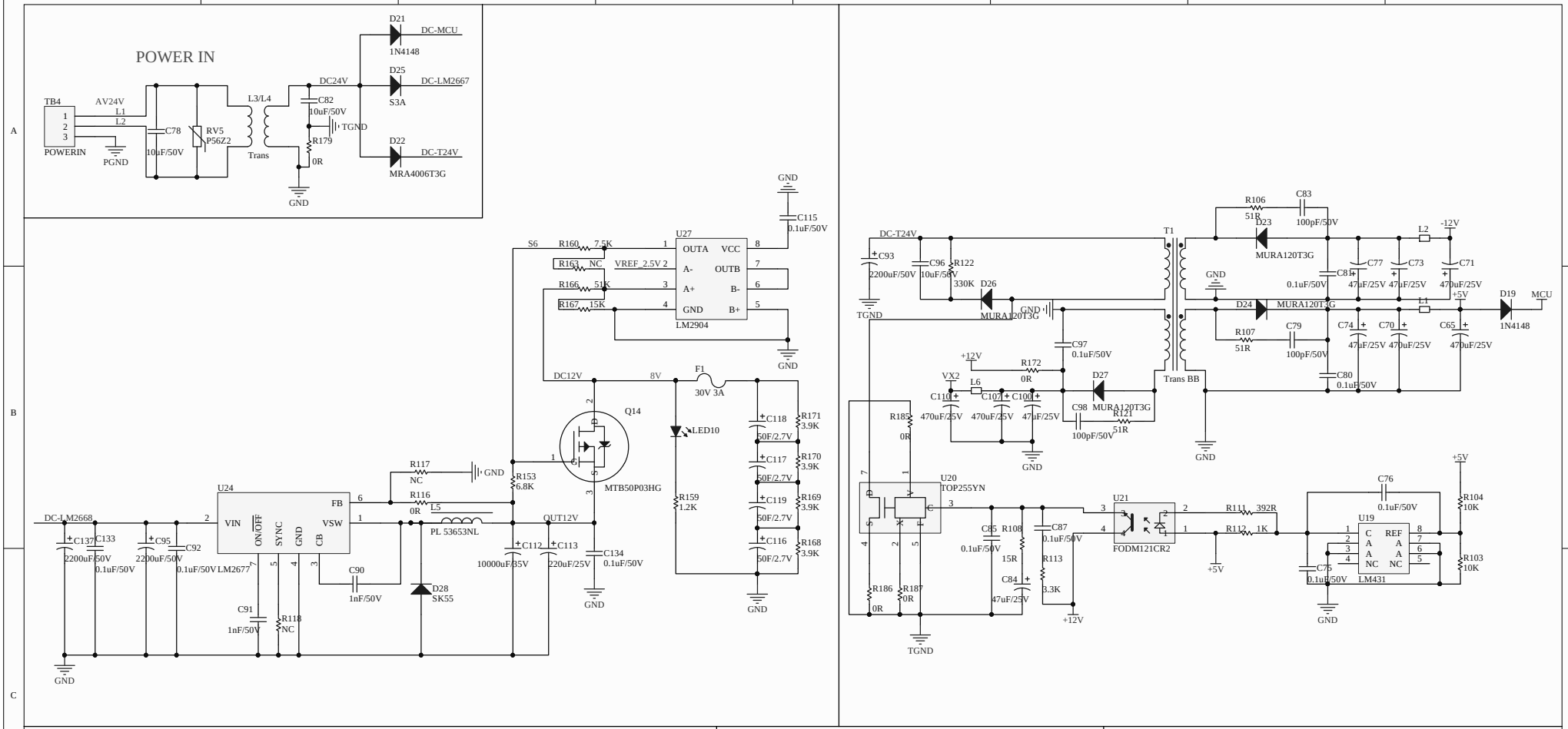

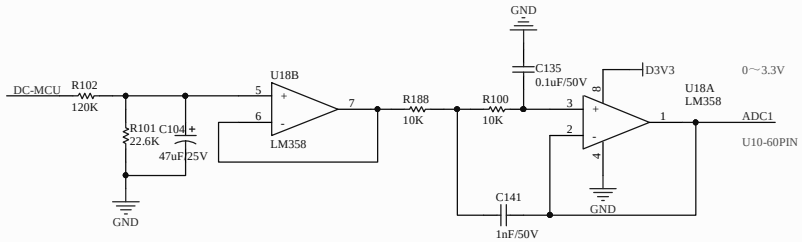

电源电压采样监测

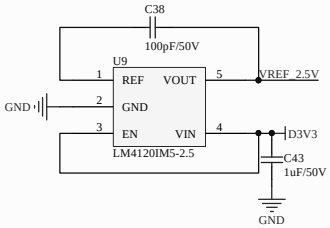

基准电压

MUC电源3.3V

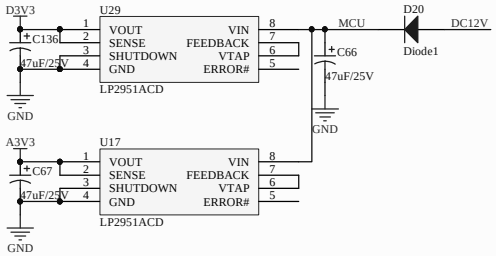

Title		
Size A3	Number	Revision
Date: 2023-06-05		Sheet of
File: D:\work\PCB\K-L\POWER.SchDoc		Drawn By: