MHF® I Connector with Lock

Part No. Plug: 20278-112R-**,20351-112R-37

Receptacle: 20279-001E-** / 20431-001E-01 / 20441-001E-01

Lock part:3376-000*

Product Specification

Qualification Test Report No. TR-21009 (20278-112R-08)
TR-17057 (20278-112R-13)
TR-19088 (20278-112R-32)
TR-20036 (20351-112R-37)
TR-21010 (20278-112R-18)

4	S21595	November 11, 2021	S.Taguchi	-	M.Takemoto
3	S21071	February 16, 2021	S.Taguchi	-	M.Takemoto
2	S20485	September 11, 2020	J.Tonai	-	M.Takemoto
1	S19764	December 19, 2019	K. Ikeshita	J. Tonai	Y. Hashimoto
Rev.	ECN	Date	Prepared by	Checked by	Approved by

1. Scope

This product specification defines the test conditions and the performances of the MHF I Connector with Lock.

2. Product Name and Parts No.

2.1 Product Name

MHF I Connector with Lock

2.2 Parts No.

Plug : 20278-112R-08
20278-112R-13
20278-112R-32
20351-112R-37
20278-112R-18
Lock part: 3376-000*
Receptacle : 20279-001E-** / 20431-001E-01 / 20441-001E-01

3. Rating

3.1 Applicable Cable

3.1.1 Plug part No.20278-112R-08

(1) Description

Inner conductor : AWG#36(7/0.05) ,Silver plating copper wire
Dielectric core : Fluoro-plastics ,diameter 0.40(+0.04,-0.02)mm
Outer conductor : Braid of 0.05mm, diameter 0.65(±0.1)mm , silver plating copper wire or tin plating copper wire
Jacket : Fluoro-plastics , diameter 0.81(+0.04,-0.03)mm

(2) Requirements

Characteristic impedance : 50±3Ω by TDR method
Nominal capacitance(Reference value): 96 pF/m
Dielectric withstand voltage : no breakdown at AC 1,000V for 1 minutes.

3.1.2 Plug part No.20278-112R-13

(1) Description

Inner conductor : AWG#32(7/0.08), Silver plating copper wire
Dielectric core : Fluoro-plastics , diameter 0.70mm
Outer conductor : Braid of 0.05mm, diameter0.93mm , silver plating copper wire or tin plating copper wire
Jacket : Fluoro-plastics , diameter 1.13mm

(2) Requirements

Characteristic impedance : 50±2Ω by TDR method
Nominal capacitance(Reference value) : 97 pF/m
Dielectric withstand voltage : no breakdown at AC 1,000V for 1 minutes.

3.1.3 Plug part No.20278-112R-32

(1) Description

Inner conductor : AWG#32(7/0.08), Silver plating copper wire
Dielectric core : Fluoro-plastics , diameter 0.66mm
First outer conductor : Braid of 0.05mm, tin plating copper wire
Second outer conductor : Braid of 0.05mm, diameter 1.12mm , tin plating copper wire
Jacket : Fluoro-plastics , diameter 1.32mm

(2) Requirements

Characteristic impedance : 50±2Ω by TDR method
Nominal capacitance(Reference value): 95 pF/m
Dielectric withstand voltage : no breakdown at AC 1,500V for 1 minutes.

3.1.4 Plug part No.20351-112R-37

(1) Description

Inner conductor : AWG#30(7/0.105), Silver plating copper wire
Dielectric core : Fluoro-plastics , diameter 0.925mm
Outer conductor : Braid of 0.05mm, diameter 1.15mm , tin plating copper wire
Jacket : Fluoro-plastics , diameter 1.37mm

(2) Requirements

Characteristic impedance : 50±2Ω by TDR method
Nominal capacitance(Reference value): 96 pF/m
Dielectric withstand voltage : no breakdown at AC 1000V for 1 minutes.

3.1.5 Plug part No.20278-112R-18

RG178 B/U

(1) Description

Inner conductor : AWG#30(7/0.102), silver plating copper clad steel wire
Dielectric core : Fluoro-plastics , diameter 0.84(±0.03)mm
Outer conductor : Braid of 0.1mm , diameter 1.35(±0.14)mm , silver plating copper wire
Jacket : Fluoro-plastics , diameter 1.8(±0.1)mm

(2) Requirements

Characteristic impedance : 50±2Ω by TDR method
Nominal capacitance(Reference value): 95 pF/m
Dielectric withstand voltage : no breakdown at AC 2,000V for 1 minutes.

3.2 Operating Conditions

Voltage : 60V AC (per a contact)
Nominal characteristic impedance : 50Ω
Frequency : DC～6GHz
VSWR :
Plug : 1.3 Max at 0.1~3GHz, 1.5 Max at 3~6GHz, 1.9 Max at 6~9GHz
Receptacle : 1.3 Max at 0.1~3GHz, 1.4 Max at 3~6GHz, 1.8 Max at 6~9GHz
Operating Temperature : 233～363K(-40℃～90℃)

3.3 Storage Conditions

Storage temperature: 248 to 333K(-25℃ to 60℃)
Storage humidity: 85% max. (Non-condensing)

4. Test and Performance

Test Condition

Unless otherwise specified, all tests and measurements shall be performed under the following conditions in accordance with MIL-STD-202.

Temperature: 288K to 308K(15℃ to 35℃)
Pressure: 866hPa to 1066hPa(650mmHg to 800mmHg)
Relative humidity: 45 to75% R.H.

4.1. Electrical Performance

1. Contact resistance	
Reference standard:	MIL-STD-202-307
Test conditions:	Solder the receptacle connector to the test board and mate the plug connector together, then measure the contact resistance as shown in Fig.1 by the four terminal method. Open circuit voltage: 20mV MAX Circuit current:10mA MAX. (DC or AC1kHz) Contact resistance of inner contact <resistance of A-E> - <resistance of B-E> Contact resistance of ground contact <resistance of C-D> - <resistance of B-D>
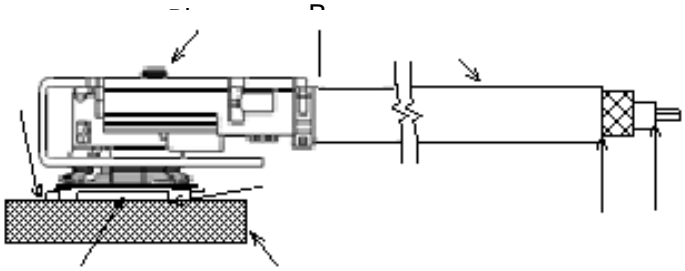 Fig.1	
Pass criteria:	Contact Initial: 20 mΩMAX. After testing: 25 mΩ MAX. Ground contact Initial: 10 mΩ MAX. After testing: 15 mΩ MAX.

2. Insulation resistance	
Reference standard:	MIL-STD-202-302, Test condition A.
Test conditions:	Mate the plug and receptacle connector together, and then apply DC 100 V between the inner contact and the ground contact.
Pass criteria:	Initial: 500 MΩ MIN. After testing: 100 MΩ MIN.

3. Dielectric withstanding voltage	
Reference standard:	MIL-STD-202-301
Test conditions:	Mate the receptacle and plug connector together, then apply AC 200V(rms) between the inner contact and the ground contact for a minute in accordance for a minute.
Pass criteria:	No abnormalities such as creeping discharge, flashover, insulator breakdown occur.

4.1. Electrical Performance

4. VSWR	
Reference standard:	-
Test conditions:	Measure the VSWR as shown in Fig.2 by the network analyzer.
Pass criteria:	Plug 0.1～3GHz 1.3 MAX. / 3～6GHz 1.5 MAX. / 6～9GHz 1.9 MAX. Receptacle 0.1～3GHz 1.3 MAX. / 3～6GHz 1.4 MAX. / 6～9GHz 1.8 MAX.

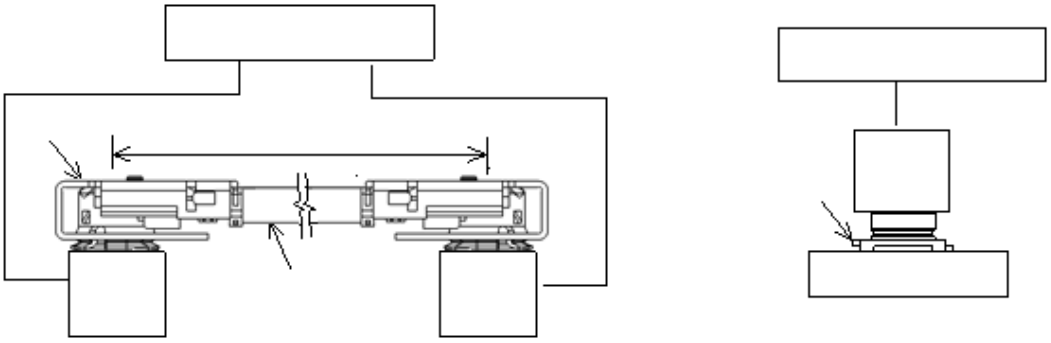

Fig.2

4.2. Mechanical Performance

1. Un-mating force	
Reference standard:	-
Test conditions:	Unmate the receptacle connector (soldered to the test board) and plug at a speed 25±3mm/minutes along the mating by the push-on/pull-off machine.
Pass criteria:	Unmating force 〈Unlock state〉 Initial: 5 N MIN. 30cycles: 3 N MIN. Unmating force 〈Lock state〉 Initial: 20 N MIN. Unmating force of inner contact Initial : 0.15N Min. 30 cycles : 0.10N Min.

2. Crimp strength	
Reference standard:	-
Test conditions:	Pull the cable as shown in Fig.3 at a speed 25±3mm/minutes by tensile strength machine.

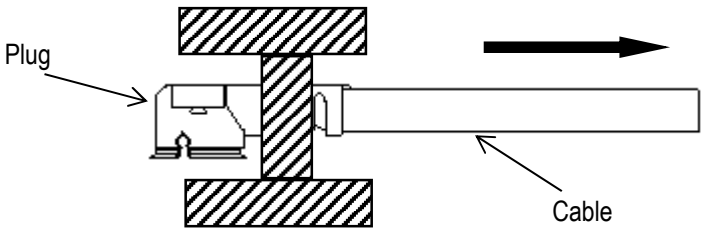

Fig.3

Pass criteria:	Plug part No.20278-112R-08,13,32 : 10N MIN., Plug part No. 20278-112R-18, 20351-112R-37 :15N MIN.

4.2. Mechanical Performance

3. Durability	
Reference standard:	-
Test conditions:	Mate and unmate the receptacle connector (soldered to the test board) and plug 30 cycles at a speed 25±3mm/minutes along the mating by the push-on/pull-off machine .
Pass criteria:	Contact resistance: Shall meet4.1.1

4. Contact resistance with force on the cable	
Reference standard:	-
Test conditions:	Apply force on the cable as shown in Fig.4. During the testing, run 100mA DC to check electrical discontinuity.
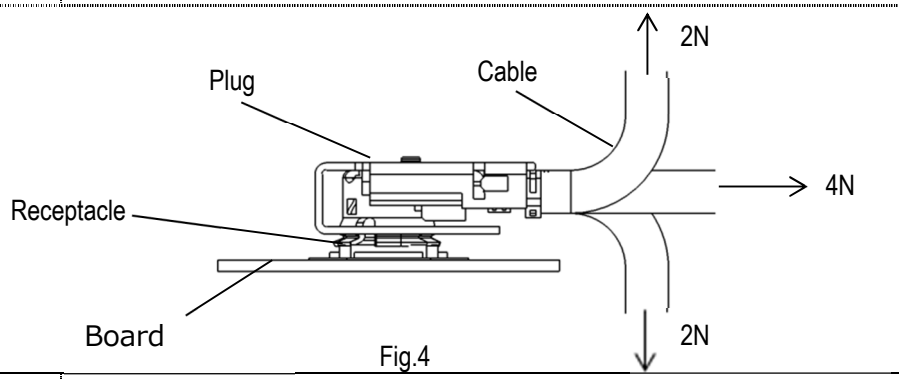 Fig.4	
Pass criteria:	Contact resistance: Shall meet 4.1.1 Electrical discontinuity: No electrical discontinuity greater than 1μs shall occur. Appearance: No abnormality adversely affecting the performance shall occur.

5. Vibration	
Reference standard:	-
Test conditions:	Solder the receptacle connector to the test board, then mate plug connector, and place them on the vibrator. Then apply the following vibration. During the testing, run 100mA DC to check electrical discontinuity. Frequency: 10Hz→100Hz→10Hz/approx. 20min. Half amplitude ,Peak value of acceleration 1.5mm or 59m/s2 (6G) Directions , cycle 3 mutually perpendicular direction 3 cycles about each direction
Pass criteria:	Contact resistance: Shall meet 4.1.1. Electrical discontinuity: No electrical discontinuity greater than 1μs shall occur. Appearance: No abnormality adversely affecting the performance shall occur.

6. Shock		
Reference standard:	-	
Test conditions:	Solder the receptacle connector to the test board, then mate plug connector, and place them on the shock machine. Then apply the following shock.	
	MAX.G: 75G Duration: 11msec Wave Form: Half Sinusoidal	Directions: 6 mutually perpendicular direction Cycle: 3 cycles about each direction
Pass criteria:	Contact resistance: Shall meet 4.1.1. Electrical discontinuity: No electrical discontinuity greater than 1μs shall occur. Appearance: No abnormality adversely affecting the performance shall occur.	

4.3. Environmental Performance

1. Thermal shock	
Reference standard:	-
Test conditions:	Solder the receptacle connector to the test board, then mate plug connector, and expose them to the following environment. Temperature: 233K(-40℃)/30 minutes→278～308K(5～35℃)/ 5 minutes Max.→363K(90℃)/30 minutes→278～308K(5～35℃)/5 minutes Max. No. of cycles: 5 cycles
Pass criteria:	Contact resistance: Shall meet 4.1.1 Insulation resistance: Shall meet 4.1.2 Appearance: Looseness between the parts, chipping, breakage or other abnormality shall not occur.

2. Humidity(Steady state)	
Reference standard:	MIL-STD-202-103, Test condition B.
Test conditions:	Apply the following environment to the mating connector in accordance. Temperature : 313±2 K (40±2℃) Humidity : 90～95%RH Duration : 96 hours
Pass criteria:	Contact resistance: Shall meet 4.1.1 Insulation resistance: Shall meet 4.1.2 Appearance: No abnormality adversely affecting the performance shall occur.

3. Salt water spray	
Reference standard:	MIL-STD-202-101, Test condition B.
Test conditions:	Solder the receptacle connector to the test board, then mate plug connector, and expose them to the following environment. Temperature: 308±2K (35±2℃) Salt water density: 5±1% [by weight] Duration: 48 hours
Pass criteria:	Contact resistance: Shall meet 4.1.1. Appearance: No abnormality adversely affecting the performance shall occur.

4. High temperature life	
Reference standard:	-
Test conditions:	Solder the receptacle connector to the test board, then mate plug connector, and expose them to the following environment. Temperature: 363±2K (90±2℃) Duration: 96 hours
Pass criteria:	Contact resistance: Shall meet 4.1.1. Appearance: No abnormality adversely affecting the performance shall occur.

4.4. Others

1. Solder ability	
Reference standard:	-
Test conditions:	Dip the solder tine of the contact in the solder bath at 518±5K （245±5℃） for 5±0.5seconds after immersing the tine in the flux of RMA or R type for 5 to 10 seconds.
Pass criteria:	More than 95% of the dipped surface shall be evenly wet.

2. Soldering heat resistance	
Reference standard:	-
Test conditions:	Put on the receptacle connector to PCB , apply the heat 2 cycles as shown in Fig.5

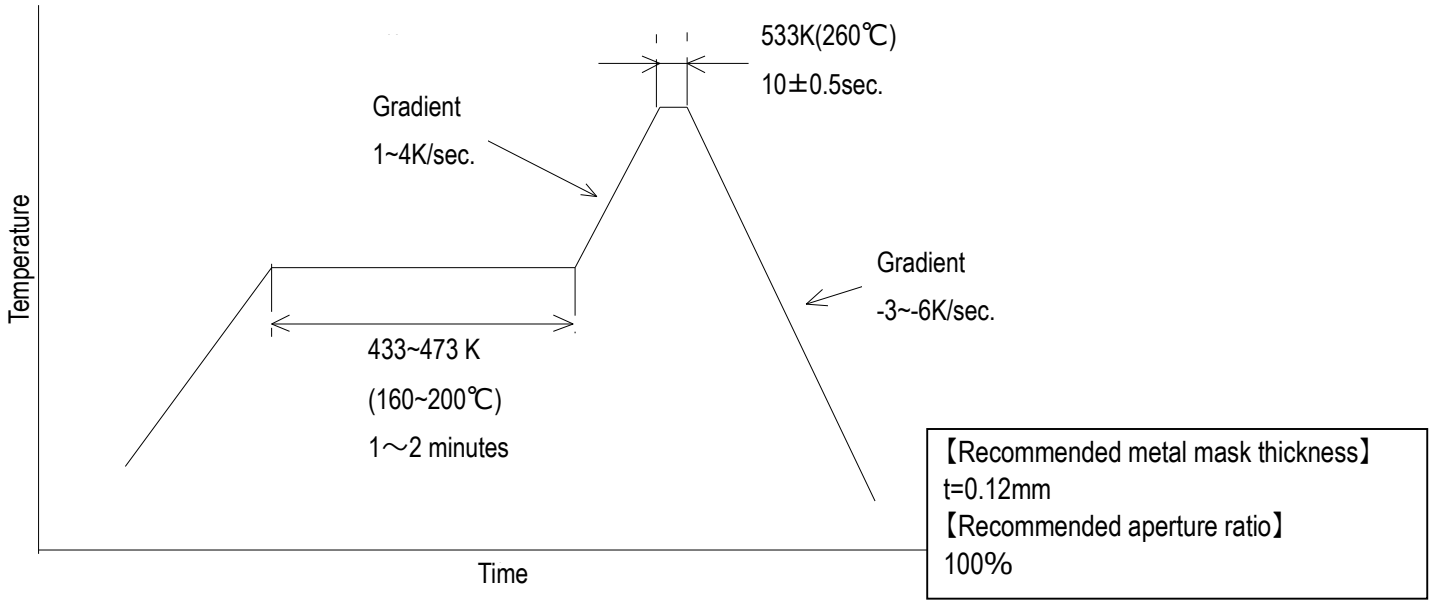

Fig.5

Pass criteria:	No abnormality adversely affecting the performance shall not occur.

4.5 Test Sequence and Specimen Quantity

Table.1 Test Sequence and Sample Quantity

Test Item	Group														
	A	B	C	D	E	F	G	H	J	K	L	M	N	P	Q
Contact resistance						1,3	1,3	1,3	1,3	1,4	1,4	1,3	1,3		
Insulation resistance										2,5	2,5				
Dielectric Withstanding Voltage	1														
VSWR		1													
Un-mating force <Unlock state>			1												
Un-mating force <Lock state>				1											
Crimp strength					1										
Durability						2									
Contact resistance with force on the cable							2								
Vibration								2							
Shock									2						
Thermal shock										3					
Humidity(Steady state)											3				
Salt water spray												2			
High temperature life													2		
Solder ability														1	
Soldering heat Resistance															1
Sample Quantity	10	5	10	10	10	10	10	10	10	10	10	10	10	10	10

※Numbers indicate test sequences in which tests are performed.

5. Recommended Metal Mask

Refer to drawing for the recommended metal mask thickness and opening dimension.